The intent of these drawings is to indicate in general, a discription of the electrical system for the structure. All work must be installed in accordance with all applicable State and local building codes and the N.E.C. to provide a functional and operable electrical system.

ELECTRICAL GENERAL SPECIFICATIONS

THE DRAWINGS ARE DIAGRAMATIC AND ARE NOT INTENDED TO INCLUDE EVERY DETAIL OF CONSTRUCTION, MATERIALS, AND EQUIPMENT. THE ELECTRICAL CONTRACTOR SHALL REVIEW THE CONTRACT DOCUMENTS OF ALL TRADES, AND SHALL COORDINATE HIS WORK WITH OTHER TRADES AS NECESSARY TO AVOID CONFLICTS AND INTERFERENCES.
ALL WORK AND MATERIALS SHALL BE IN ACCORDANCE WITH ALL STATE, LOCAL, AND NATIONAL CODES, AND SHALL COMPLY WITH THE CURRENT NATIONAL ELECTRIC CODE. LOCATIONS INDICATED FOR OUTLETS, EQUIPMENT, ETC. ARE APPROXIMATE, AND SHALL BE VERIFIED PRIOR TO ROUGH-IN. FOR EQUIPMENT BY OTHERS, VERIFY ALL DETAILS WITH OWNERS SELECTED VENDOR. ALL WIRING SHALL BE CONCEALED IN BUILDING WALLS AND LOCATED ABOVE CEILINGS IN FINISHED SPACES. WIRING MAY BE RUN EXPOSED IN UNFINISHED EQUIPMENT ROOMS OR WHERE INDICATED ON THE DRAWINGS.

ALL MATERIALS AND EQUIPMENT SHALL BE NEW WHEN INSTALLED UNLESS OTHERWISE INDICATED ON THE DRAWINGS. ALL MATERIALS AND EQUIPMENT SHALL BE LISTED BY UNDERWRITER'S LABORATORIES, INC. FOR THE APPLICATION IN WHICH THEY ARE USED. THE APPLICATION FOR UL LISTING SHALL NOT BE CONSIDERED EQUIVALENT TO UL LISTING.

MINIMUM CONDUIT SIZE SHALL BE 1/2". ALL CONDUIT, WHERE REQUIRED BY CODE, SHALL BE ZINC COATED EMT EXCEPT IN WET, DAMP, OR UNDER GROUND LOCATIONS, WHERE ZINC COATED RIGID STEEL OR SCHEDULE 40 PVC SHALL BE USED.
ALL FITTINGS SHALL BE UL LISTED. EXTERIOR WIRING SYSTEMS SHALL BE WATER TIGHT, WITH MATCHING JUNCTION BOXES, PULL BOXES, AND TERMINATIONS.

DOUBLE LOCK NUTS SHALL BE USED ON ALL FEEDER MOTOR CIRCUIT CONDUITS, AND WHERE INSULATED BUSHINGS ARE USED. ALL CONDUITS SHALL HAVE MANUFACTURED METAL SUPPORTS OF RUST PROOF FINISH, SECURED AS REQUIRED. WIRING PENETRATIONS THROUGH SLABS AND FIRE RATED WALLS SHALL BE SEALED WITH IMPERVIOUS NON-COMBUSTIBLE MATERIALS IN SUCH A MANNER AS TO RESTORE THE ORIGINAL FIRE RATING. MANUFACTURED MATERIALS SHALL BE UL LISTED. ALL RACEWAYS FOR NEW WORK SHALL COMPLY WITH NEC CONDUIT FILL REQUIREMENTS.

FOR POWER AND LIGHTING WIRING IN APARTMENTS, MINIMUM CONDUCTOR SIZE SHALL BE #14 AWG TYPE NM CABLE INSTALLED IN ACCORDANCE WITH ARTICLE 336 OF THE CURRENT NEC. WHERE FLEXIBLE WIRING IS USED, THE INSTALLATION SHALL BE IN ACCORDANCE WITH THE APPLICABLE ARTICL COVERING THE FLEXIBLE WIRING METHOD. CONTRACTOR SHALL VERIFY RATED ASSEMBLE LOCATIONS FROM ARCHITECTURAL PLANS.

WIRING DEVICES SHALL BE LEVITON, HUBBEL, OR EQUAL. DEVICE AND PLATE COLORS SHALL BE SELECTED BY OWNER OR ARCHITECT. ALL ELECTRICAL CONDUCTORS SHALL BE TESTED FOR CONTINUITY AND GROUNDS BEFORE BEING ENERGIZED.
ALL FAULTY CONDUCTORS SHALL BE REPLACED. THE ELECTRICAL CONTRACTOR SHALL CONNECT ALL EQUIPMENT REQUIRING ELECTRICAL CONNECTIONS, EXCEPT CONTROL WIRING PROVIDED BY OTHERS. CONNECTIONS TO EXTERIOR HVAC ANS SIMILAR EQUIPMENT SHALL BE THROUGH NEOPRENE JACKETED FLEXIBLE METALLIC CONDUIT WITH WATER TIGHT CONNECTIONS.

PANELBOARDS SHALL BE SQUARE D OR EQUIVALENT PRODUCTS BY GENERAL ELECTRIC, WESTINGHOUSE, OR ITE. APARTMENT PANELBOARDS SHALL BE OF THE LOAD CENTER TYPE AND BREAKERS SHALL BE OF THE PLUG IN TYPE. BREAKERS FOR HVAC EQUIPMENT SHALL BE HACR TYPE OR UNIT SHALL BE FUSED PER NAMEPLATE.
SAFTY SWITCHES SHALL BE QUICK MAKE-QUICK BREAK TYPES, OF THE SIZE AND FUSING INDICATED ON THE DRAWINGS. PROVIDE NEMA 1 ENCLOSURE FOR INDOOR SWITCHES AND NEMA 3R ENCLOSURE FOR OUTDOOR SWITCHES. FUSES SHALL BE DUAL ELEMENT, TIME DELAY TYPE. MANUAL MOTOR STARTERS SHALL BE MOTOR SENTINEL TYPE WITH PROPERLY SIZED OVERLOAD HEATERS, MOUNTED IN NEMA 1 OR NEMA 3R ENCLOSURE AS REQUIRED. SERVICE GROUND SHALL BE PROVIDED.

ALL LIGHTING FIXTURES SHALL BE PROVIDED WITH NEW LAMPS. FLUORESCENT BALLASTS SHALL BE ENERGY-SAVING, HIGH-POWER-FACTOR CLASS P TYPE, UL AND CBM LISTED, ETL APPROVED, HAVING 'A' SOUND RATING. ELECTRICAL CONTRACTOR SHALL PROVIDE LAMP FOR RANGE HOOD.

TELEPHONE SHALL BE PRE-WIRED WITH 3 PAIR CABLE. ONE CABLE SHALL BE PROVIDED FROM APARTMENT TO TELEPHONE CONNECTION POINT. TELEPHONE OUTLETS SHALL BE EQUAL TO HUBBEL TSFJ11 OR TWJ11, AND SHALL BE FULLY CONNECTED.
TELEVISION CABLE SHALL BE PROVIDED AND SHALL BE INDIVIDUALLY RUN FROM EACH TV OUTLET TO THE BUILDING TELEVISION TERMINATION POINT.

ELECTRICAL GENERAL NOTES

1.) ALL ELECTRICAL WORK SHALL BE IN ACCORDANCE WITH THE CURRENT NATIONAL ELECTRIC CODE AND ALL LOCAL AND STATE CODES.

2.) ALL MATERIALS SHALL BE NEW AND SHALL CONFORM TO THE STANDARDS OF THE UNDERWRITER'S LABORATORIES, INC., AND THE NATIONAL MANUFACTURES ASSOC.

3.) ALL ELECTRICAL PERMITS AND INSPECTION FEES SHALL BE OBTAINED AND PAID FOR BY THE ELECTRICAL CONTRACTOR.

4.) DRAWINGS ARE DIAGRAMATIC ONLY AND INDICATE ONLY THE GENERAL ARRANGEMENT. SEE ARCHITECTURAL DRAWINGS FOR EXACT DIMENDIONS.

5.) ELECTRICAL CONTRACTOR SHALL GUARANTEE ALL WORK AND MATERIALS FOR ONE YEAR EFFECTIVE THE DAY THE PROJECT IS ACCEPTED BY THE OWNER.

6.) ELECTRICAL CONTRACTOR SHALL MAKE ALL ELECTRICAL POWER CONNECTIONS TO HVAC, PLUMBING, AND OTHER EQUIPMENT AS REQUIRED.

7.) A COMPLETE GROUNDING SYSTEM SHALL BE PROVIDED AND INSTALLED IN ACCORDANCE WITH ARTICLE 250 OF THE NEC, AND AS SHOWN ON THE DRAWINGS.

8.) ALL CUTTING AND PATCHING OF WALLS AND FLOORS FOR ELECTRICAL EQUIPMENT SHALL BE THE RESPONSIBILITY OF THE ELECTRICAL CONTRACTOR.

9.) BRANCH CIRCUIT WIRING WITHIN DWELLING UNITS SHALL BE NON-METALLIC SHEATHED CABLE. PROVIDE TYPE 'NM' INDOORS AND TYPE 'NMC' FOR DAMP OR WET LOCATIONS. USE 60° C AMPACITY RATING. ALL BRANCH CIRCUIT CONDUCTORS SHALL BE COPPER.

10.) FEEDER CONDUCTORS SHALL BE COPPER OR ALUMINUM TYPE SER. CONDUCTORS ON DRAWINGS ARE SIZED FOR COPPER. ALUMINUM CONDUCTORS SHALL BE SIZED IN ACCORDANCE WITH NEC TABLE 310-16 TO PROVIDE THE EQUIVALENT AMPACITY.

11.) ALL TERMINALS, SPLICING CONNECTORS, LUGS, ETC., SHALL BE IDENTIFIED FOR USE WITH THE MATERIAL (CU/AL) OF THE CONDUCTOR AND SHALL BE PROPERLY INSTALLED.

12.) COORDINATE LOCATION AND REQUIREMENTS FOR ELECTRICAL SERVICE ENTRANCE EQUIPMENT WITH POWER CO.

13.) COORDINATE LOCATION AND REQUIREMENTS FOR TELEPHONE SERVICE ENTRANCE WITH PHONE CO. BUILDING TO BE PRE-WIRED TO TELEPHONE CO. STANDARDS.

14.) ALL CIRCUITS IN ALL PANEL BOARDS AND ALL SERVICE FEEDERS SHALL BE CLEARLY LABELED TO INDICATE THE LOAD BEING SERVED.

15.) SUPPLY AND INSTALL BUILDING WIRING SYSTEM FOR CONNECTION TO UNDERGROUND CABLE TV SYSTEM BY OTHERS.
COORDINATE EXTERIOR CONNECTION POINT WITH CABLE CO.

16.) ELECTRICAL CONTRACTOR SHALL BE RESPONSIBLE FOR PROTECTING ALL ELECTRICAL EQUIPMENT FROM FOREIGN MATERIAL DURING CONSTRUCTION (PAINT, SPACKLE, ETC.).

17.) SEE ARCHITECTURAL DRAWINGS FOR NUMBER AND LOCATION OF UNITS.

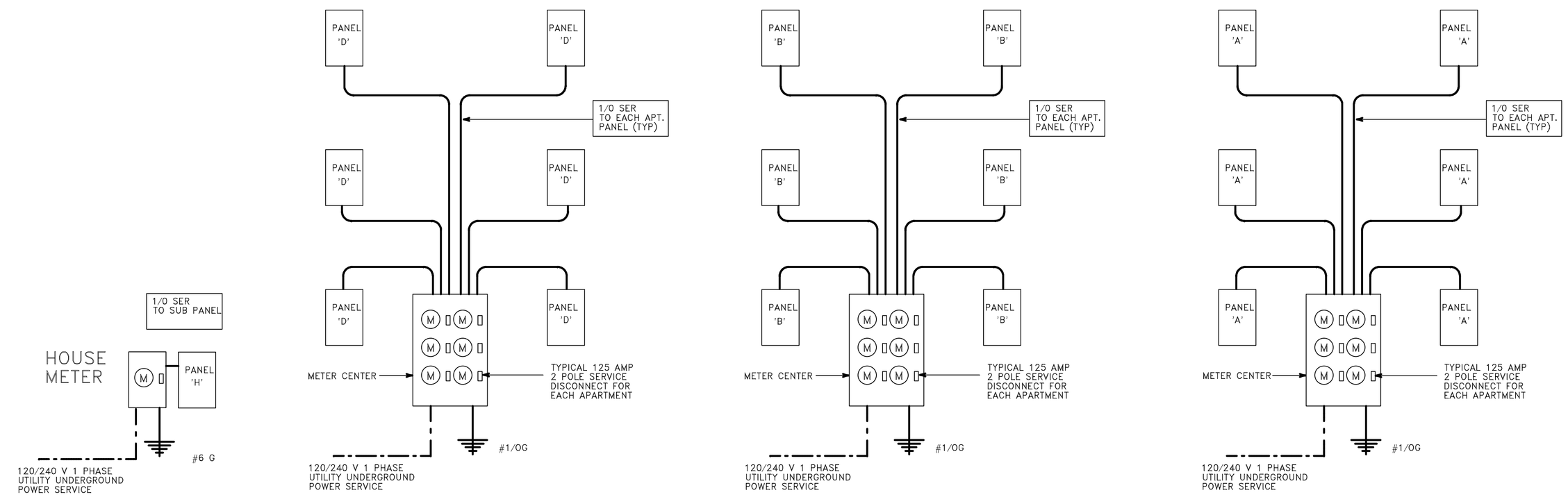

HOUSE SERVICE (D / E4)
NOT TO SCALE
100 AMP

SERVICE 'C' (C / E4)
NOT TO SCALE
600 AMP

SERVICE 'B' (B / E4)
NOT TO SCALE
600 AMP

MAX. 6 DISC. MEANS PER LOCATION

SERVICE 'A' (A / E4)
NOT TO SCALE
600 AMP

ELECTRICAL LOAD SUMMARY — 3 BEDROOM — 1274 SQ. FT.

LOAD DESIGNATION			LOAD (KVA)
LIGHTS – RECEPTACLES			3.82
APPLIANCES			3.00
LAUNDRY			1.50
WATER HEATER			4.50
RANGE			8.00
DRYER			5.00
DISHWASHER			0.75
DISPOSAL			0.75
BATH FANS			0.08
27.4	TOTAL		27.4
		DEMAND	16.96
11.1	HVAC LOAD	65% HEAT	7.2
38.5	APT LOAD	TOTAL LOAD	24.16

ELECTRICAL LOAD SUMMARY — 2 BEDROOM — 1177 SQ. FT.

LOAD DESIGNATION			LOAD (KVA)
LIGHTS – RECEPTACLES			3.53
APPLIANCES			3.00
LAUNDRY			1.50
WATER HEATER			4.50
RANGE			8.00
DRYER			5.00
DISHWASHER			0.75
DISPOSAL			0.75
BATH FANS			0.08
27.1	TOTAL		27.1
		DEMAND	16.84
9.1	HVAC LOAD	65% HEAT	5.9
36.2	APT LOAD	TOTAL LOAD	22.74

ELECTRICAL LOAD SUMMARY — 1 BEDROOM — 763 SQ. FT.

LOAD DESIGNATION			LOAD (KVA)
LIGHTS – RECEPTACLES			2.29
APPLIANCES			3.00
LAUNDRY			1.50
WATER HEATER			4.50
RANGE			8.00
DRYER			5.00
DISHWASHER			0.75
DISPOSAL			0.75
BATH FANS			0.04
25.83	TOTAL		25.83
		DEMAND	16.3
6.3	HVAC LOAD	65% HEAT	4.1
32.1	APT LOAD	TOTAL LOAD	20.4

PANEL 'C'

120/240 VOLTS, MOUNTING: FLUSH, 1 PHASE 3 WIRE W/ #6 GROUND, TYPE: LOADCENTER, PANELBOARD ASSEMBLY RATING: 10 KAIC RMS SYMM, MAINS: 125 AMP MLO

LOAD SERVED	TRIP	CIRCUIT NO.	PHASE A	PHASE B	NO. CIRCUIT	TRIP	LOAD SERVED
LIGHTS AND RECEPTACLE	15	1			2	30	WATER HEATER
LIGHTS AND RECEPTACLE	15	3			4		
APPLIANCE	20	5			6	30	DRYER
APPLIANCE	20	7			8		
WASHER	20	9			10	40	RANGE
DISHWASH / DISPOSAL	20	11			12		
BATH RECEPTACLE	20	13			14	40	FC 1
SPACE ONLY					16		
SPACE ONLY					18	20	HP 1
SPACE ONLY							

PANEL 'B'

120/240 VOLTS, MOUNTING: FLUSH, 1 PHASE 3 WIRE W/ #6 GROUND, TYPE: LOADCENTER, PANELBOARD ASSEMBLY RATING: 10 KAIC RMS SYMM, MAINS: 125 AMP MLO

LOAD SERVED	TRIP	CIRCUIT NO.	PHASE A	PHASE B	NO. CIRCUIT	TRIP	LOAD SERVED
LIGHTS AND RECEPTACLE	15	1			2	30	WATER HEATER
LIGHTS AND RECEPTACLE	15	3			4		
APPLIANCE	20	5			6	30	DRYER
APPLIANCE	20	7			8		
WASHER	20	9			10	40	RANGE
DISHWASH / DISPOSAL	20	11			12		
BATH RECEPTACLE	20	13			14	40	FC 1
SPACE ONLY					16		
SPACE ONLY					18	20	HP 1
SPACE ONLY							

PANEL 'A'

120/240 VOLTS, MOUNTING: FLUSH, 1 PHASE 3 WIRE W/ #6 GROUND, TYPE: LOADCENTER, PANELBOARD ASSEMBLY RATING: 10 KAIC RMS SYMM, MAINS: 125 AMP MLO

LOAD SERVED	TRIP	CIRCUIT NO.	PHASE A	PHASE B	NO. CIRCUIT	TRIP	LOAD SERVED
LIGHTS AND RECEPTACLE	15	1			2	30	WATER HEATER
LIGHTS AND RECEPTACLE	15	3			4		
APPLIANCE	20	5			6	30	DRYER
APPLIANCE	20	7			8		
WASHER	20	9			10	40	RANGE
DISHWASH / DISPOSAL	20	11			12		
BATH RECEPTACLE	20	13			14	30	FC 1
SPACE ONLY					16		
SPACE ONLY					18	20	HP 1
SPACE ONLY							

ELECTRICAL CONTRACTOR TO VERIFY BREAKER SIZE REQUIRED FOR MECHANICAL EQUIP.

BRANCH CIRCUITS MUST BE INSTALLED PER ARTICLE 210 NEC
MUST MEET REQUIREMENTS OF ARTICLE 300.21 NEC

NOTE:
1.) PROVIDE #14 AWG FOR CIRCUITS 1 AND 3.
2.) PROVIDE #12 AWG FOR CIRCUITS 5,7,9,11,AND 13

CHARLES M. HILL, A.I.A.
ARCHITECT
NEBO, NC
TELEPHONE (828) 659-1540

OWNER / DEVELOPER:
MOUNTAIN ISLAND APARTMENTS, LLC
1329 EAST MOREHEAD STREET, SUITE 200
CHARLOTTE, NC 28204

MOUNTAIN ISLAND LAKE APARTMENTS
MT. HOLLY/HUNTERSVILLE RD AND HWY 16
CHARLOTTE, NC 28216

CHARLES M. HILL REGISTERED ARCHITECT NO. 4877 NEBO, NC

JOB NO.	
DRAWN BY	CMH
CHECKED BY	CMH
DATE	4-22-2010
REVISIONS	6-30-2010
	8-2-10

SHEET NO.
E-4

PDF Created with deskPDF PDF Writer - Trial :: http://www.docudesk.com