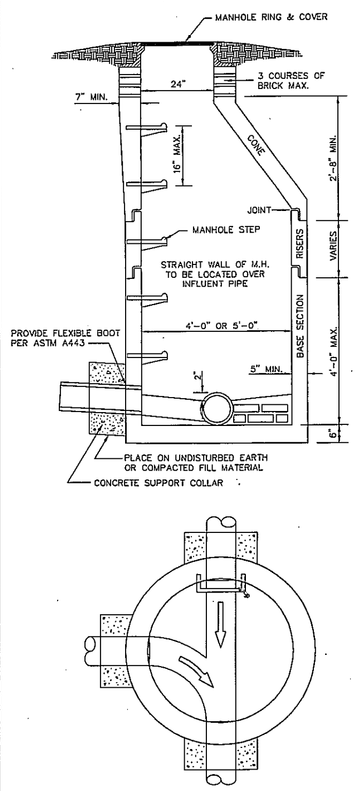

NOTES:

1. MANHOLE TO CONFORM WITH ASTM C478-72 EXCEPT AS MODIFIED BELOW.
2. MANHOLE BASE TO BE REINFORCED WITH A MINIMUM AREA OF 0.20 SQ. IN. PER LINEAR FOOT EACH WAY AND BENT UP AT WALLS 10" AND SPLICED TO WALL REINFORCING. WALL REINFORCING TO BA A MINIMUM OF 0.12 SQ. IN. PER LINEAR FOOT. BOTH TONGUE AND GROOVE OF JOINTS SHALL HAVE REINFORCING EQUAL IN AREA TO MINIMUM OF WALL SECTION.
3. ALL JOINTS SHALL CONFORM WITH ASTM C443-63
4. STEPS TO BE PLASTIC.
5. ALL PIPE OPENINGS TO BE NO GREATER THAN 3" LARGER THAN O.D. OF PIPE AND ADDITIONALLY REINFORCED WITH A MINIMUM OF 0.20 SQ. IN. OF STEEL AT 90 DEGREES. PIPE TO BE CENTERED IN OPENINGS AND SUPPORTED WITH A CONCRETE COLLAR 12" GREATED THAN O.D. OF PIPE FOR ONE FOOT FROM THE WALL. CONCRETE SHALL BE FORCED FROM THE OUTSIDE TO BECOME AN INTREGAL PART OF THE MANHOLE INVERT OR TO A POINT FLUSH WITH INSIDE WALL.
6. ALL SURFACES SHALL BE SMOOTH EVEN TEXTURED WITH A MINIMUM OF HONEYCOMB, FINS AND OTHER INPERFECTIONS
7. LIFTING HOLES SHALL BE PLUGGED FROM OUTSIDE PRIOR TO BACKFILLING
8. INVERTS IN 5' DIAMETER MANHOLES TO BE 3600 PSI READY MIX CONCRETE IN LIEU OF BRICK.
9. STEPS IN 5' DIAMETER MANHOLES TO BE OVER WIDEST SHELF.
10. ALL MASONRY MORTAR SHALL BE PORTLAND CEMENT 1 : 3 MIX.
11. CARE MUST BE TAKEN TO FORM A SMOOTH FINISHED TROUGH FROM ENTRANCE PIPES TO EXIT PIPE, AND IN CURVED MANHOLES THE TROUGH MUST BE A SMOOTH CIRCULAR ARC TANGENT TO THE INSIDE WALLS OF THE PIPES AT THEIR ENDS.
12. RAMSET MASONRY TIES EVERY 12 INCHES.
13. PROTECTIVE WALL FOR OUTSIDE DROP SHALL BE A MINIMUM OF 4" MASONRY, AN 8" WALL MAY BE REQUIRED UNDER SOME CONDITIONS.
14. THE SLOPE OF THE OUTSIDE DROP TROUGH SHALL BE 1/4" PER FOOT.
15. DROP STRUCTURE MAY BE FORMED AND POURED OF 3600 PSI CONCRETE IN LIEU OF MASONRY.
16. FOOTING FOR DROP MAY BE POURED AS PART OF THE MANHOLE BASE SLAB OR FIELD POURED AND TIED TO MANHOLE BASE WITH THREE EQUALLY SPACED #6 REBARS DOWELED INTO MANHOLE BASE 2" FROM TOP OF SLAB, GROUT INTO 8" DEEP HOLES WITH EXPANSION GROUT.
17. OUTSIDE DROP SHALL NOT ENTER MANHOLE IN CONE SECTION.
18. JOINTS TO BE THOROUGHLY SEALED WITH SEALANT TAR PUTTY TO PREVENT INFILTRATION.

NOTE:
ALL MANHOLES OVER 16' TOTAL DEPTH SHALL HAVE OSHA APPROVED STAINLESS STEEL LADDER IN LIEU OF MANHOLE STEPS

PRECAST MANHOLE (4' AND 5' DIA)

N.T.S.

X	Y	MIN. NO. OF PIPE BRACKETS
0"-72"	60"	3
72"-84"	66"	3
84"-96"	72"	3
OVER 96"	AS APPROVED BY ENGINEER	3 OR 4

ELEVATION EQUAL TO 100 YEAR FLOOD LEVEL + 1 FOOT

NOTES:

STEEL VENT PIPE: UNLESS OTHERWISE SPECIFIED, STEEL VENTS SHALL BE SCHEDULE 40 FIVE INCH (5") DIAMETER STEEL PIPE, CONSISTING OF GRADE "B" STEEL AS SPECIFIED IN ASTM A139.

- ALL STEEL SHALL BE GRADE "B" ONLY, WITH A MINIMUM YIELD STRENGTH OF 35,000 PSI.
- THE STEEL PIPE SHALL HAVE AN INSIDE COAL TAR LINING 3/32 INCH MINIMUM THICKNESS ACCORDING TO AWWA C203 OR A COAL TAR EPOXY LINING CONFORMING TO THAT REQUIRED FOR STEEL (AERIAL CREEK CROSSING) PIPE.
- OUTSIDE SURFACE OF PIPE SHALL BE SAND OR GRIT BLASTED TO COMMERCIAL STANDARD AND PRIMED WITH 1.0 COAL TAR PRIMER MATERIAL APPLIED IN ACCORDANCE WITH FEDERAL SPECS. TT-P-86A.
- PIPE SHALL BE FINISHED WITH TWO (2) EVENLY APPLIED COATS OF RUST INHIBITING ENAMEL PAINT, EITHER KOPPERS GLAMORTEX NO. 501 ENAMEL (OLIVE GREEN), SOUTHERN COATINGS RUSTALOY NO. 0537 ENAMEL (CARDIN GREEN), OR EQUAL.
- THE WATER TRAME & COVER TO BE ANCHORED TO MANHOLE WITH RED JACKET MASONARY ANCHORS OR EQUAL AND THOROUGHLY SEALED TO CONCRETE WITH TAR SEALANT PUTTY TO PREVENT INFILTRATION.

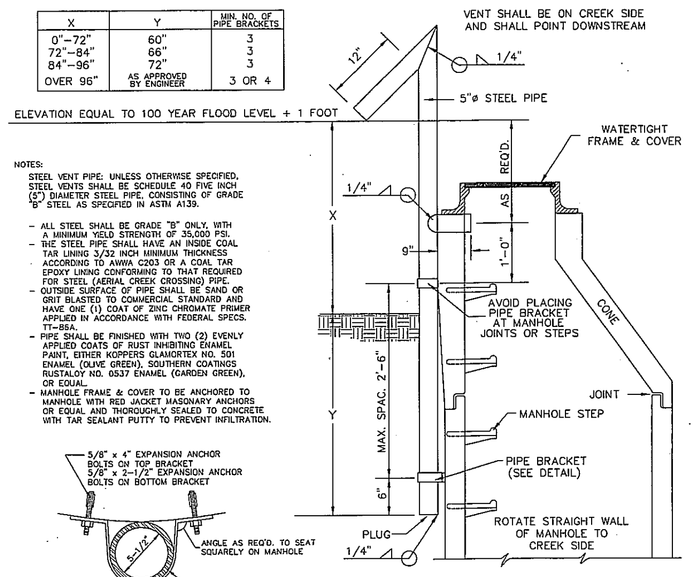

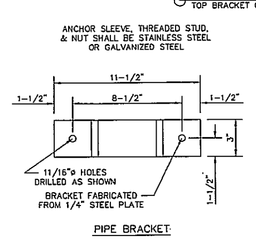

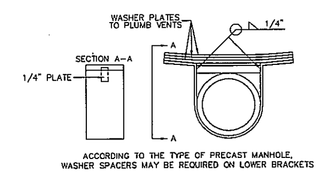

PRECAST MANHOLE - VENT TYPE

N.T.S.

NOTES:

1. BACKFLOW PREVENTION ASSEMBLIES (BPA's) SHALL CONFORM TO CMU SPECIFICATIONS. SHUT-OFF VALVES ARE SPECIFIC TO EACH APPROVED BPA AND NO SUBSTITUTIONS OF SHUT-OFF VALVES ARE PERMITTED. REFER TO CMU APPROVED LIST OF BPA's.
2. FIRE LINE SERVICES SHALL HAVE OUTSIDE STEM AND YOKE (OS & Y) HANDWHEEL OPERATORS. IF SERVING FIRE SPRINKLERS, TAMPER SWITCHES ARE REQUIRED.
3. PIPE MATERIAL AND FITTINGS SHALL BE AS SPECIFIED IN CMU STANDARDS SPECIFICATION. ALL JOINTS SHALL BE RESTRAINED WITH MEGALUG RESTRAINTS OR APPROVED EQUAL.
4. SUPPORT OF ASSEMBLY SHALL BE DESIGNED BY OWNER, 8" - 12" SHALL BE SUPPORTED AT EACH VALVE AND SHALL NOT BLOCK RELIEF VALVE ON DRAIN PORT.
5. INSULATED ENCLOSURE SHALL BE AS SPECIFIED IN CMU ENCLOSURE INFORMATION - HEATED INSULATED ENCLOSURE ARE REQUIRED FOR FIRE LINE SERVICES. NO INSULATION SHALL BE WRAPPED AROUND BPA.
6. ALL LOCATIONS FOR BPA'S REQUIRE CMU APPROVAL AND MUST BE OUTSIDE OF ZONING SET-BACK.
7. THERE SHALL BE NO TAPS, PIPING BRANCHES, UNAPPROVED BYPASS PIPING, HYDRANTS, FIRE DEPT. CONNECTION POINTS, OR OTHER WATER - USING APPURTENANCES CONNECTED TO THE SUPPLY LINE BETWEEN ANY WATER METER AND ITS CMU - REQUIRED BACKFLOW PREVENTER.
8. EACH CMU-REQUIRED BPA IS REQUIRED TO BE TESTED BY A CMU - APPROVED CERTIFIED TESTER PRIOR TO PLACING THE WATER SYSTEM IN SERVICE.
9. ALL BACKFLOW PREVENTERS INTENDED FOR ADDRESSING CHARLOTTE-MECKLENBURG UTILITIES REQUIREMENTS, REQUIRE PRIOR APPROVAL FROM THE APPROPRIATE CHARLOTTE-MECKLENBURG UTILITIES BACKFLOW INSPECTOR.

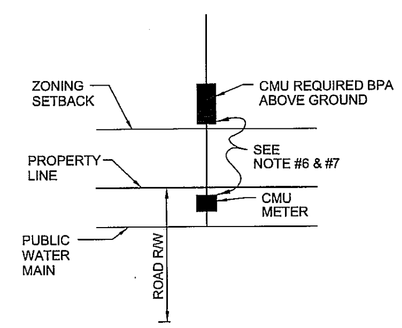

TYPICAL LOCATION REQUIREMENT FOR ABOVE GROUND INSTALLATION

N.T.S.

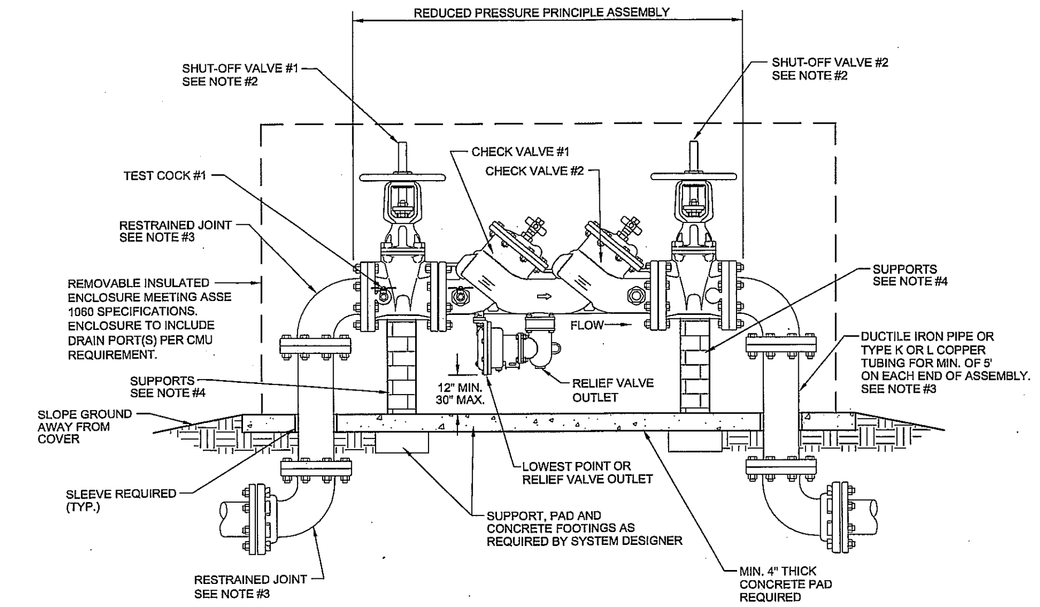

REDUCED PRESSURE PRINCIPLE ASSEMBLY (RP) 2 1/ 2" - 12" ABOVE GROUND

N.T.S.

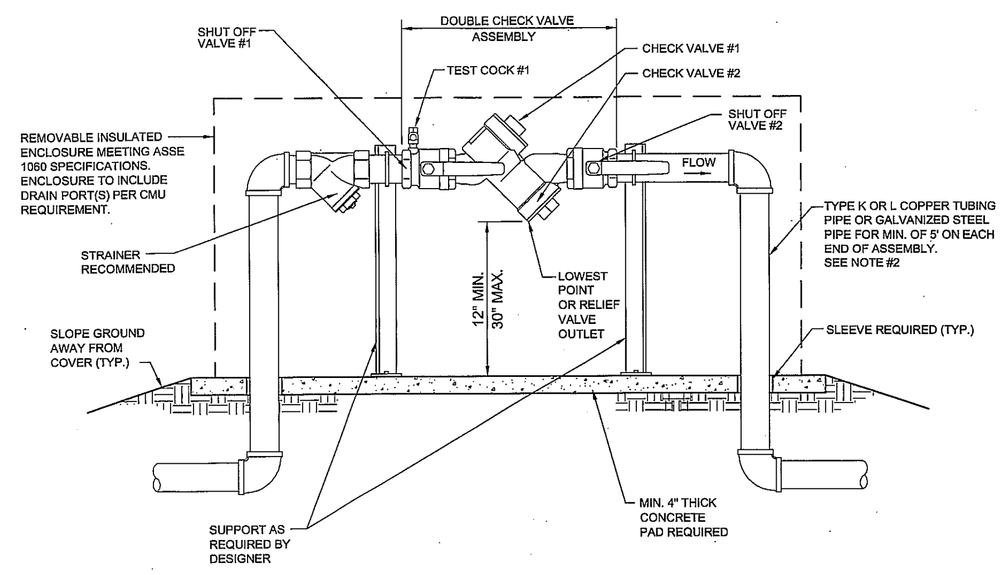

NOTES:

1. BACKFLOW PREVENTION ASSEMBLIES (BPA's) SHALL CONFORM TO CMU SPECIFICATIONS. SHUT-OFF VALVES ARE SPECIFIC TO EACH APPROVED BPA AND NO SUBSTITUTIONS OF SHUT-OFF VALVES ARE PERMITTED. REFER TO CMU APPROVED LIST OF BPA's.
2. PIPE MATERIAL AND FITTINGS SHALL BE AS SPECIFIED IN CMU STANDARDS & SPECIFICATIONS.
3. INSULATED ENCLOSURE SHALL BE AS SPECIFIED IN CMU ENCLOSURE INFORMATION - HEATED INSULATED ENCLOSURE IS RECOMMENDED. NO INSULATION SHALL BE WRAPPED AROUND BPA.
4. ALL LOCATIONS FOR BPA'S REQUIRE CMU APPROVAL AND MUST BE OUTSIDE OF ZONING SET-BACK.
5. THERE SHALL BE NO TAPS, PIPING BRANCHES, UNAPPROVED BYPASS PIPING, HYDRANTS, FIRE DEPT. CONNECTION POINTS, OR OTHER WATER - USING APPURTENANCES CONNECTED TO THE SUPPLY LINE BETWEEN ANY WATER METER AND ITS CMU - REQUIRED BACKFLOW PREVENTER.
6. EACH CMU-REQUIRED BPA IS REQUIRED TO BE TESTED BY A CMU - APPROVED CERTIFIED TESTER PRIOR TO PLACING THE WATER SYSTEM IN SERVICE.
7. ALL BACKFLOW PREVENTERS INTENDED FOR ADDRESSING CHARLOTTE-MECKLENBURG UTILITIES REQUIREMENTS, REQUIRE PRIOR APPROVAL FROM THE APPROPRIATE CHARLOTTE-MECKLENBURG UTILITIES BACKFLOW INSPECTOR.

DOUBLE CHECK VALVE ASSEMBLY (DC) 1 1/2" & 2" ABOVE GROUND

N.T.S.

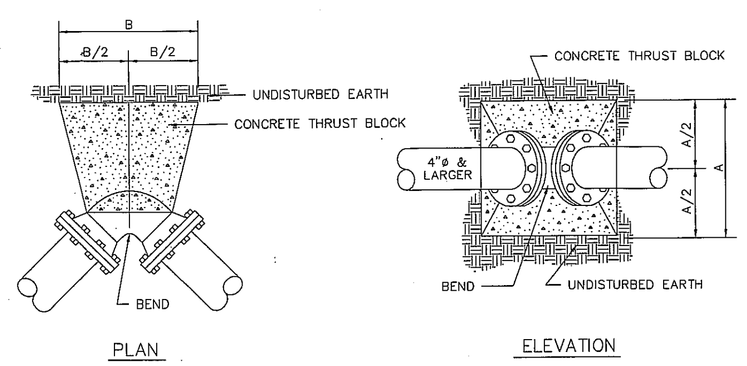

PLAN ELEVATION

TYPICAL THRUST BLOCK FOR BENDS

N.T.S.

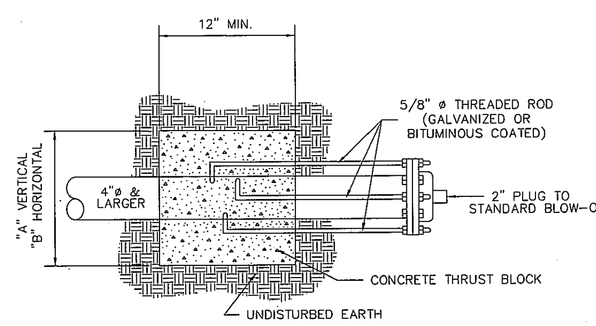

TYPICAL THRUST BLOCK FOR PLUGS

N.T.S.

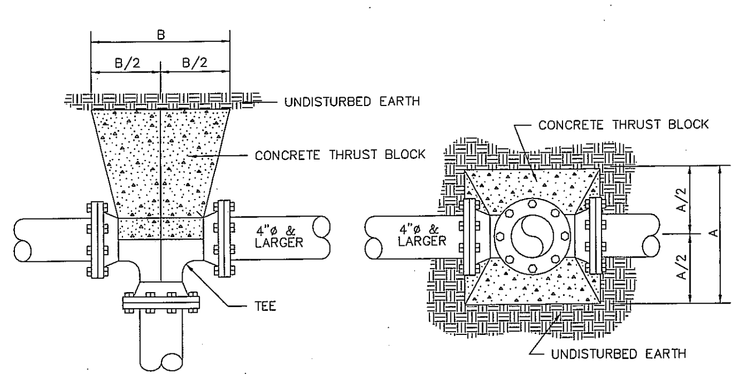

PLAN ELEVATION

TYPICAL THRUST BLOCK FOR TEES

N.T.S.

SIZE		11 1/4" BEND	22 1/2" BEND	45° BEND	90° BEND	TEE	PLUG
4"	A	6"	8"	9"	12"	6"	6"
	B	6"	12"	16"	22"	6"	6"
6"	A	9"	9"	15"	18"	16"	15"
	B	9"	18"	21"	32"	26"	29"
8"	A	12"	12"	18"	24"	21"	21"
	B	12"	24"	31"	43"	34"	37"
10"	A	15"	18"	21"	30"	24"	27"
	B	15"	24"	42"	54"	47"	45"
12"	A	15"	18"	27"	36"	30"	30"
	B	22"	35"	46"	64"	54"	58"
14"	A	15"	21"	30"	42"	36"	36"
	B	29"	41"	57"	75"	62"	66"
16"	A	18"	24"	39"	48"	42"	42"
	B	32"	47"	69"	86"	69"	74"
18"	A	21"	27"	40"	54"	48"	48"
	B	34"	53"	70"	96"	77"	82"
20"	A	24"	30"	48"	60"	54"	54"
	B	37"	59"	60"	107"	84"	90"
24"	A	27"	36"	54"	72"	60"	60"
	B	47"	71"	92"	127"	108"	116"

NOTES:

1. CARE SHALL BE TAKEN WHEN POURING THRUST BLOCKS TO KEEP THE FITTING BOLTS FREE FROM CONCRETE.
2. THRUST BLOCK DESIGN BASED ON SOIL COMPRESSIVE STRENGTH OF 2000 P.S.F.
3. DIMENSIONS MAY BE FIELD ADJUSTED BY THE ENGINEER TO SUIT VARYING SOIL CONDITIONS.

THRUST BLOCKS - DIMENSIONS "A" & "B"

N.T.S.

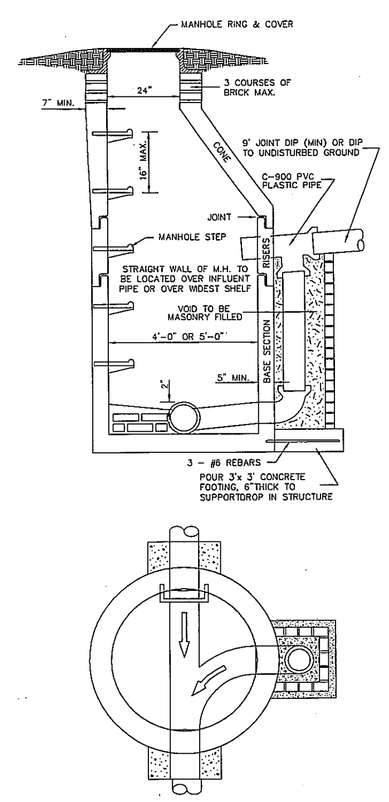

PRECAST MANHOLE W/ OUTSIDE DROP (4' AND 5' DIA)

N.T.S.

LandDesign.
223 N. Graham Street, Charlotte, NC 28202
V: 704.333.0325 F: 704.332.3246
www.LandDesign.com
NC Engineering Firm License: C-0658

LANDDESIGN, INC. CORPORATE SEAL NORTH CAROLINA

NORTH CAROLINA PROFESSIONAL SEAL 036762 ENGINEER MATTHEW W. BRAMWELL
11-22-10

MOUNTAIN ISLAND APARTMENTS
MULTI-FAMILY APARTMENTS
MOUNTAIN ISLAND APARTMENTS, LLC CHARLOTTE (FT), MECKLENBURG COUNTY, NC

UTILITY DETAILS

REVISIONS:
7-28-10 HUD COMMENTS
10/5/10 - REVISED PER CITY COMMENTS
11/17/10 - REVISED PER CITY COMMENTS

DATE: JUNE 17, 2010
DESIGNED BY: MWB
DRAWN BY: MWB
CHECKED BY: RJK
QC BY: MWV
SCALE: NTS
PROJECT #: 1098200

SHEET #:
C-6.3